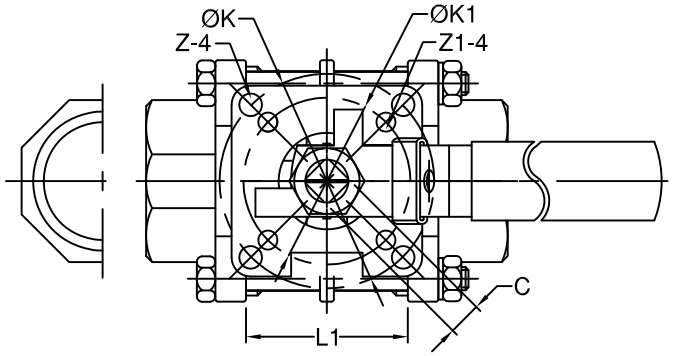

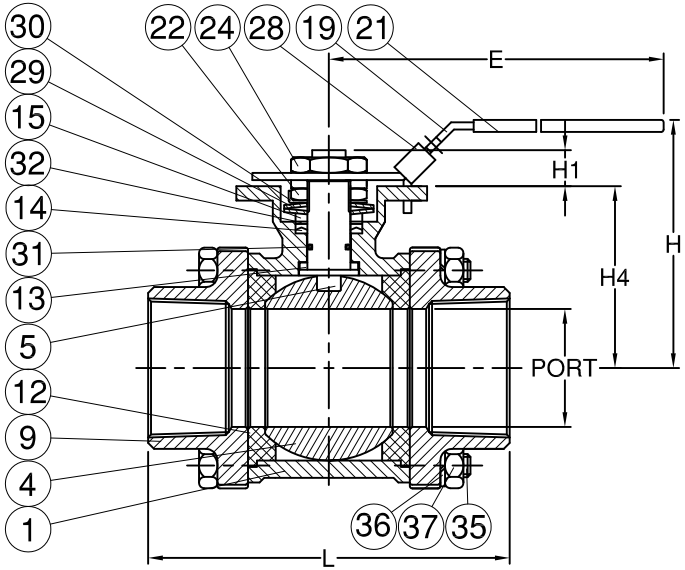

WORKING PRESSURE: 1/4"~2" 1000PSI
2-1/2"~4" 800PSI

MATERIALS LIST

NO.	PART NAME	MATERIAL
1	BODY	ASTM A351 Gr.CF8M
4	BALL	ASTM A351 Gr.CF8M
5	STEM	SS316
9	END CAP	ASTM A351 Gr.CF8M
12	SEAT	RTFE.
13	THRUST WASHER	RTFE.
14	STEM PACKING	RTFE.
15	GLAND BUSH	SS304
19	HANDLE	SS304
21	HANDLE COVER	VINYL GRIP
22	STEM NUT	SS304
24	HANDLE NUT	SS304
28	LOCKING PAD	SS304
29	BELLEVILLE WASHER	SS304-CSP
30	TAB WASHER	SS304
31	O-RING	VITON
32	PACKING FOLLWER	PTFE.+25%G.F.
35	BODY BOLT	SS304
36	BOLT WASHER	SS304
37	BOLT NUT	SS304

DIMENSIONS

unit:mm

SIZE		PORT	L	E	H	H1	H4	C	ØK	ØK1	Z-4	Z1-4	L1
DN8	1/4"	11.5	63.5	112.0	73.0	8.5	37.0	9.0	50.0	36.0	7.0	6.0	22.5
DN10	3/8"	12.5	63.5	112.0	73.0	8.5	37.0	9.0	50.0	36.0	7.0	6.0	22.5
DN15	1/2"	15.0	63.5	112.0	73.0	8.5	37.0	9.0	50.0	36.0	7.0	6.0	22.5
DN20	3/4"	20.0	72.5	112.0	80.8	8.5	45.0	9.0	50.0	36.0	7.0	6.0	27.5
DN25	1"	25.0	81.0	136.0	90.5	11.4	53.5	11.0	50.0	36.0	7.0	6.0	34.0
DN32	1-1/4"	32.0	94.5	185.0	98.7	11.4	59.0	11.0	50.0	36.0	7.0	6.0	42.5
DN40	1-1/2"	38.0	108.0	197.9	115.3	14.0	74.8	14.0	70.0	50.0	9.0	7.0	52.0
DN50	2"	50.0	121.5	197.9	124.0	13.7	83.5	14.0	70.0	50.0	9.0	7.0	63.5
DN65	2-1/2"	65.0	157.5	267.0	155.0	18.0	108.8	17.0	102.0	70.0	11.0	9.0	85.5
DN80	3"	80.0	190.0	267.0	208.5	18.0	118.3	17.0	102.0	70.0	11.0	9.0	102.0
DN100	4"	100.0	225.0	322.0	216.7	18.0	153.8	17.0	102.0	70.0	11.0	9.0	128.5

REV	DATE	DESCRIPTION	CODE	REVISER	REMARKS
					1/4"~4" Full Port

MATERIAL
OTHER

APPROVE		CHECK		REV	
SCALE	FREE	UNIT	mm	DRAWN BY	Lawrence
PART NO	AF-33			DATE	2008.10.07
DWG NO	AF-33		TITLE	Q'TY	
				3-PC Direct Mount Threaded End Ball Valve	

Anson Flow Corp.